Electronic Component Distributor. Source::E-Switch
P.N:200MDP1T2B2M6RE Desc:SWITCH TOGGLE DPDT 0.4VA 20V
Web:http://www.hotenda.cn E-mail:sales@hotenda.cn Phone:(+86) 07558379435 4
HOTENDA TECHNOLOGY CO.,LTD.

SHEET OF

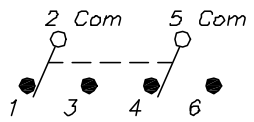

CIRCUIT: DPDT

SWITCH FUNCTION		
POS. 1	POS. 2	POS. 3
ON	NONE	ON
2-3,5-6	OPEN	2-1,5-4

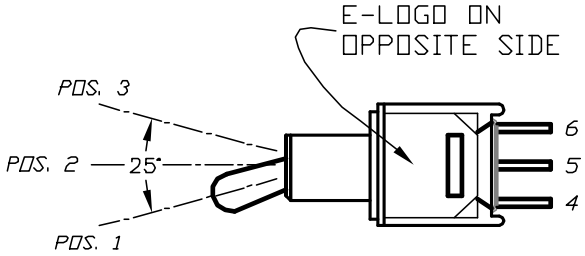

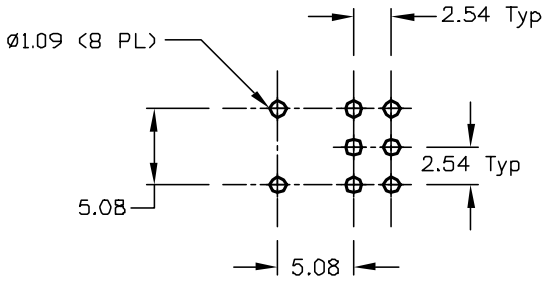

RECOMMENDED P.C.B LAYOUT

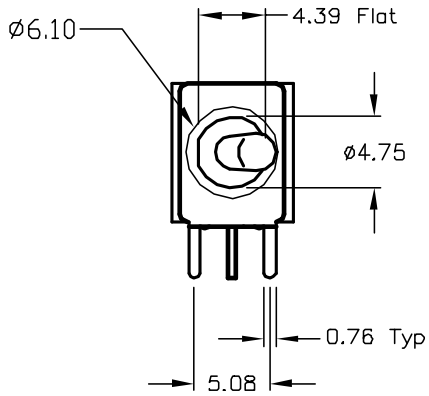

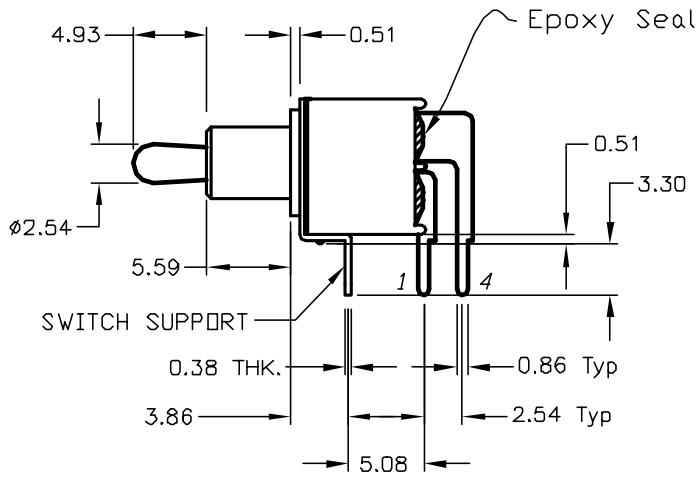

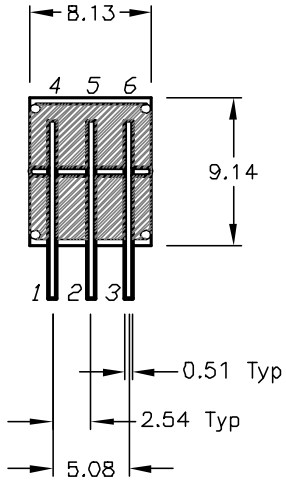

NOTES:

1. ALL DIMENSIONS IN MM
2. GENERAL TOLERANCE: X.X=±0.4
   X.XX=±0.25
3. TERM. NOS. FOR REF. ONLY
4. CONTACT RATING: 0.4(VA) Max. @20VAC OR DC Max.
5. ▲ FIXED TERMINAL & MOVING CONTACT: Cu alloy w/ Gold plate over Ni plate.
6. ELECTRIC LIFE: 30,000 make-and-break cycles at full load.
7. INSULATION RESISTANCE: 1,000 M ohm min.
8. DIELECTRIC STRENGTH: 1,000 V RMS @sea level.
9. OPERATING TEMP.: -30°C to 85°C

REV.	ECN No.	DESCRIPTION	DATE	CHKD
C	12312	ADD E-LOGO	7/19/02	CJB
B	11407	REVISED ACTUATOR	4/12/01	CJB

THE INFORMATION CONTAINED IN THIS DOCUMENT IS PROPRIETARY TO E-SWITCH AND IS NOT TO BE COPIED OR TRANSFERRED

E-SWITCH®

TITLE: 200 MDP-1 T2 B2 M6 R E (GOLD CONTACTS)

SCALE	DATE	DR	DWG	REV
2:1	4/12/01	CJB	T221012	C